2026-01-12 09:38:10

UCT 315-45 F

Slider bearing housing unit T type, Cast iron housing, Set screw locking spherical ball bearing, T type seal

技术信息

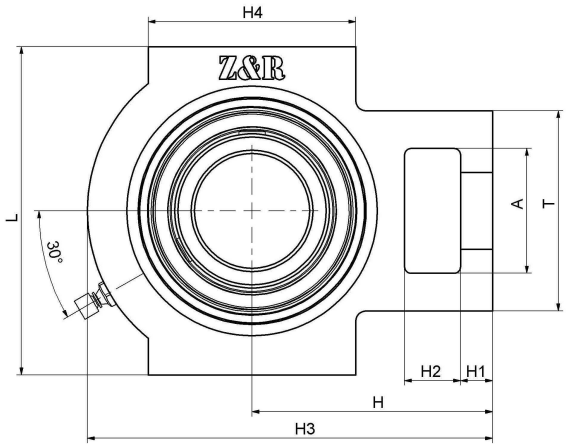

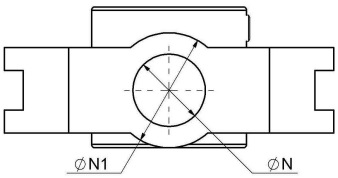

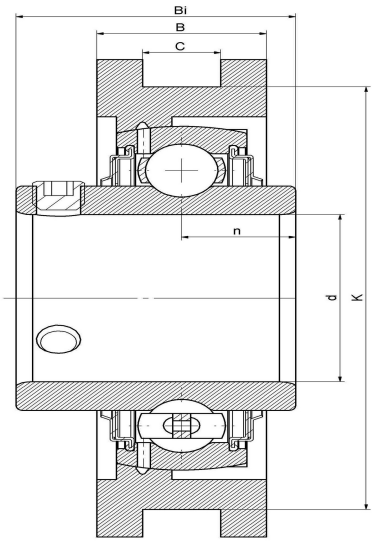

主要尺寸和性能参数

d	71.4375mm	Inside diameter
K	192mm	Guide groove distance
L	216mm	Overall length
T	132mm	Height of bearing seat fixed side
A	85mm	Pocket height
n	32mm	channel distance
C	26mm	Guide groove width
B	55mm	Bearing seat width
Bi	82mm	Total width
H4	150mm	Guide groove length
H3	262mm	Whole length
H2	36mm	Pocket width
H1	27mm	Fixed link length
H	160mm	Axis distance
N	46mm	Fixing holes
N1	90mm	Width of bearing seat fixed side
≈m	12.7Kg	weight
	UC315-45F	Bearing Type
	T315-45	Bearing seat model
	M6*1	Oil injection hole
	J7	Assembly torque
	HT200	Bearing seat material

*数据表仅为所选产品的尺寸和基本额定载荷概览。请始终遵守本产品的所有更多信息和指南。 您可通过我们网站上的联系表了解更多信息。

联系方式：邮箱：mr.suo@zrbearing.net 电话：0319-8509111 地址：河北省临西县城北环路北侧-中达轴承