2026-07-10 19:27:20

UCT 317-55 F

Slider bearing housing unit T type, Cast iron housing, Set screw locking spherical ball bearing, T type seal

技术信息

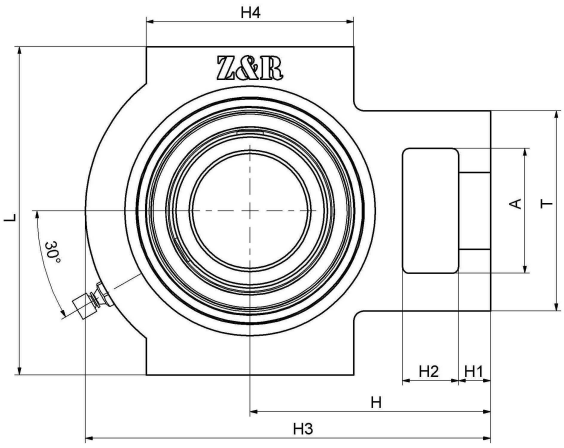

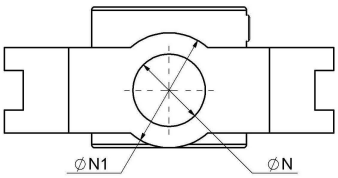

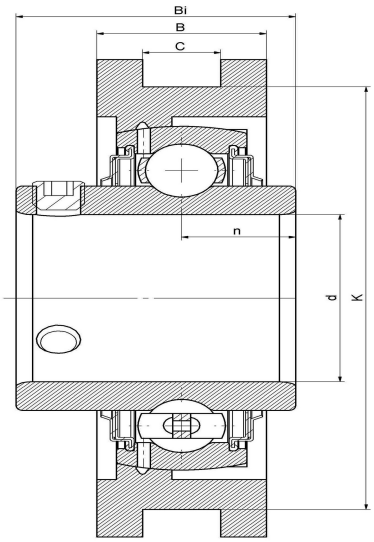

主要尺寸和性能参数

d	87.3125mm	Inside diameter
K	214mm	Guide groove distance
L	240mm	Overall length
T	152mm	Height of bearing seat fixed side
A	98mm	Pocket height
n	40mm	channel distance
C	32mm	Guide groove width
B	64mm	Bearing seat width
Bi	96mm	Total width
H4	170mm	Guide groove length
H3	298mm	Whole length
H2	42mm	Pocket width
H1	32mm	Fixed link length
H	183mm	Axis distance
N	53mm	Fixing holes
N1	102mm	Width of bearing seat fixed side
≈m	18.6Kg	weight
	UC317-55F	Bearing Type
	T317-55	Bearing seat model
	M6*1	Oil injection hole
	J7	Assembly torque
	HT200	Bearing seat material

*数据表仅为所选产品的尺寸和基本额定载荷概览。请始终遵守本产品的所有更多信息和指南。 您可通过我们网站上的联系表了解更多信息。

联系方式：邮箱：mr.suo@zrbearing.net 电话：0319-5628888 地址：河北省临西县城北环路北侧-中达轴承