2026-01-11 18:31:02

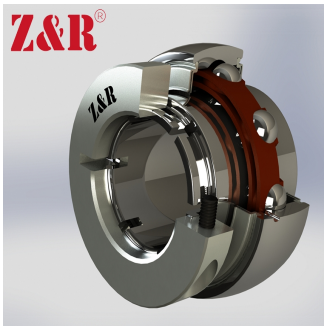

NC 208 T/G/V3/ERT--F

Insert bearings, eccentric sleeve locked outer spherical bearings, three-layer sealed outer spherical bearings

GR208

技术信息

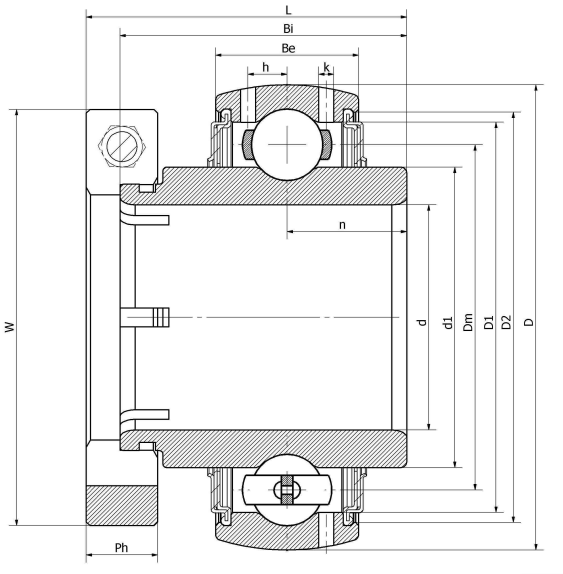

主要尺寸和性能参数

d	40mm	Inside diameter
D	80mm	Outside diameter
d1	登录可见尺寸，去登录	Outer diameter innering
Dm	60mm	Center diameter
D1	登录可见尺寸，去登录	Outer ring inner diameter
D2	登录可见尺寸，去登录	Seal groove diameter
W	60.3mm	Eccentric sleeve outer diameter
Be	21mm	Outer ring height
h	6.4mm	Oil hole distance
k	1.9mm	Oil hole diameter
n	19mm	channel distance
Bi	49.2mm	Inner ring height
L	62.7mm	total height
Ph	18.3mm	Eccentric sleeve height
(UNF)	M8*1	Set screw specifications
Cr	29300N	Radial static load rating
Cor	18200N	Radial dynamic load rating
≈m	0.7Kg	weight

*数据表仅为所选产品的尺寸和基本额定载荷概览。请始终遵守本产品的所有更多信息和指南。 您可通过我们网站上的联系表了解更多信息。